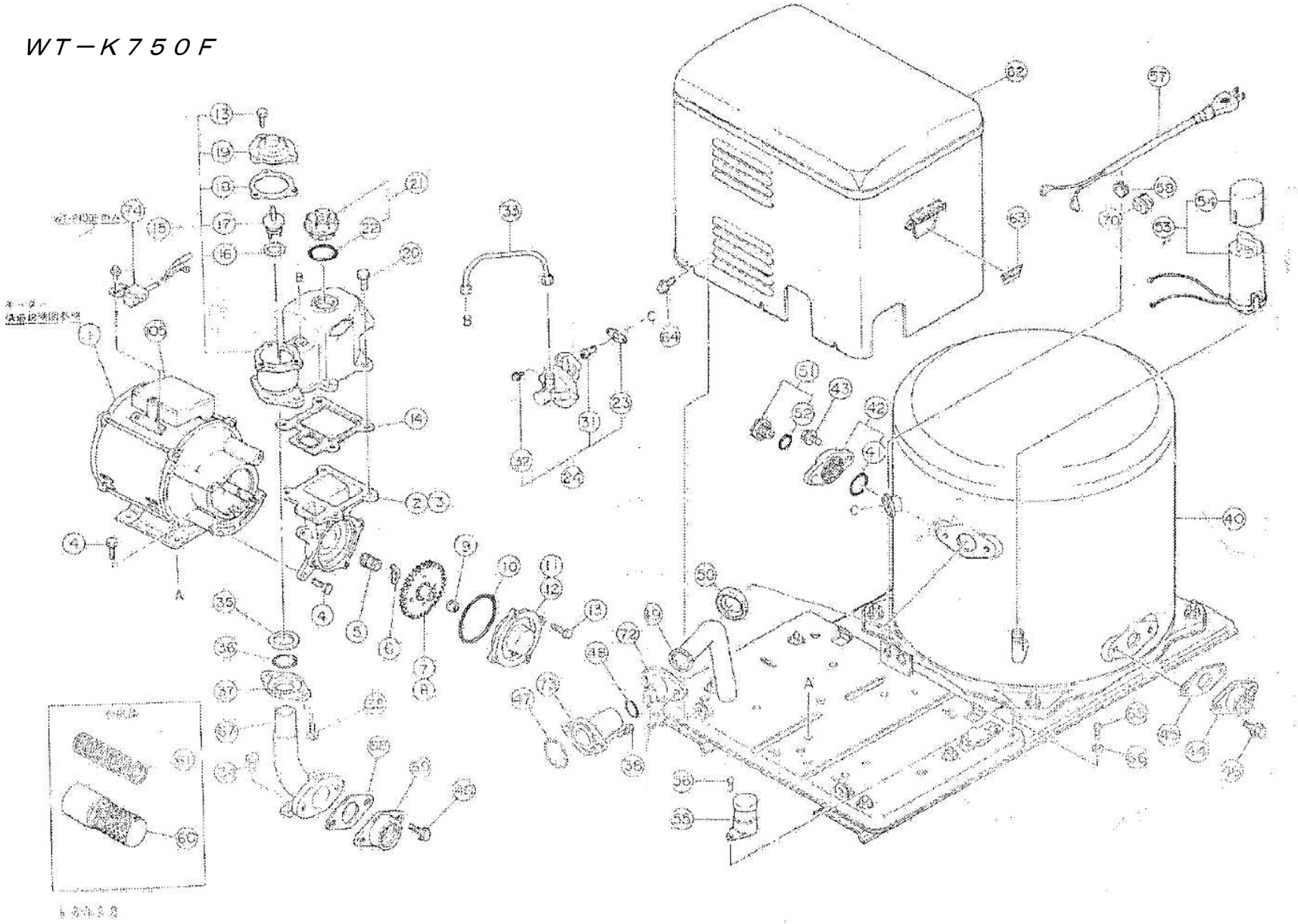WT－K750F